# eco-PEN450
# Spare parts

preeflow® by ViscoTec



## Dosing technology
## Dosing system

| Item | Part No. | x | Item name | Material | ✓ |
|---|---|---|---|---|---|
| | 20091 | | Dosing unit eco-PEN450 cpl. (without 11) | | |
| 2 | 20085 | | Union ring eco-PEN450 | Aluminium | |
| 3 | 20075 | | End piece eco-PEN450 with Luer-Lock cpl. | POM | |
| 5 | 20050 | x | Star-shaped coupling | Elastomer | |
| 6 | 20108 | | Assembly aid | Aluminium | |
| 7 | 20001 | x | Stator cpl. eco-PEN450 | VisChem | |
| 11 | 20081 | x | Drive unit eco-PEN450 cpl. | | |
| 13 | 20149 | | Bearing housing with rotor set cpl. | | |
| 14 | 20088 | | Set screw | A2 | |
| 16 | 20007 | x | O-ring Ø 16 | FKM | |
| 18 | 20089 | | Allen screw | A2 | |
| 19 | 20083 | | Dispenser housing eco-PEN450 | POM | |
| 21 | 20084 | x | O-ring Ø 15 | FKM | |
| 22 | 20011 | x | O-ring Ø 13 | FKM | |
| 23 | 20510 | | Bleed screw cpl. | POM | |
| 24 | 20513 | | O-ring | FKM | |
| 25 | 20148 | | Seal set with housing | | |
| 26 | 20090 | | Allen screw | A2 | |
| 27 | 20076 | | End piece eco-PEN450 with Luer-Lock | POM | |
| 28 | 20035 | x | O-ring | FKM | |
| 29 | 20021 | | Threaded sleeve Luer-Lock | Aluminium | |
| 30 | 20041 | x | O-ring Ø 17 | NBR | |
| 31 | 20784 | | motor cable eco-PEN cpl. | | |

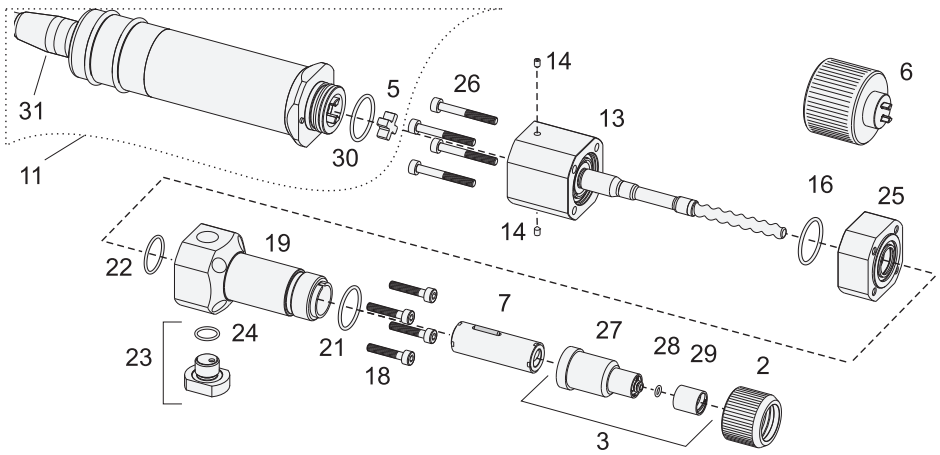


x = recommended spare parts ad wearing parts
✓= order

© ViscoTec Pumpen- u. Dosiertechnik GmbH | info@preeflow.com | www.preeflow.com
11/14 – Subject to technical changes, typographical errors and misprints reserved.